HF BATTERY CHARGER

NORDELETTRONICA

AL-KO Vehicle Technology Electronics S.r.l.
Via Vienna, 4 - 38121 Trento - Italy
Gaiarine Plant: Viale delle Industrie 6/a, 31018 Gaiarine (TV) - Italy
Tel: +39 0434 759420 - Fax: +39 0434 754620
www.nordelettronica.it - info@nordelettronica.it

Member of DEXKO GLOBAL

HF BATTERY CHARGER

These chargers are suitable for gel, AGM and lead acid batteries. The battery charger provides a combination of charge at constant current and constant voltage. This makes possible a significant reduction of the charging time and prevents permanent damage of the battery. Select with the dip switches the charging profile according to the battery type.

MODEL:	NE283	NE286	NE284	NE328

TECHNICAL CHARACTERISTICS:				
Input:	100-240Vac 50/60Hz			
Battery nominal Voltage:	**24V (12V)**	**24V**	**24V (36V) [48V]**	
Maximum current output:	**4A, 5A, (8A)**	**8A, 9A, 10A, 11A**	**13A, 15A, (10A), [8A]**	**25A, (17A), [13A]**
Battery type:	lead acid - gel - AGM - Lithium			
Setting of the charging curve :	max 16 algorithm			
Fan:	yes			
Visual indicator:	three colour LED			
Remote visual indicator:	optional (RVI22)			
Save charging cycles:	yes			
Protection IP:	IP30 (IP33 optional)			
Protection Class:	I (II)	I		
Dimension: (L x P x H mm)	133 x 125 x 60	133 x 164 x 64	133 x 240 x 64	160 x 249 x 80
Weight	0,65Kg	1,50Kg	1,60Kg	2,20Kg

CONNECTIONS:			
Input:	Connector 3-way (2-way) IEC EN60320 C14 (customizable)		
Output +/- Battery:	Cable AWG14 red / black (customizable)	Cable AWG12 (customizable)	Cable AWG10 (customizable)
Contact n.c.: (when the main supply is connected the contact is open)	Cables AWG20 (customizable)		
Download charging cycles:	Specific software and cable		

PROTECTION:	
Reverse polarity	yes
Short circuit	yes
Overcurrent	yes
Overvoltage	yes
Overtemperature	yes

MECHANICAL

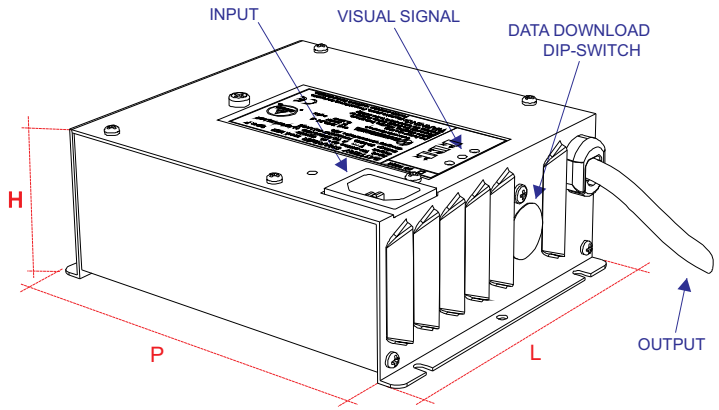

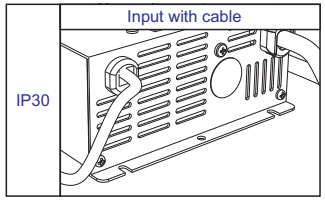

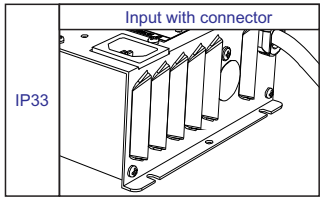

REMOTE VISUAL INDICATOR (RVI22)

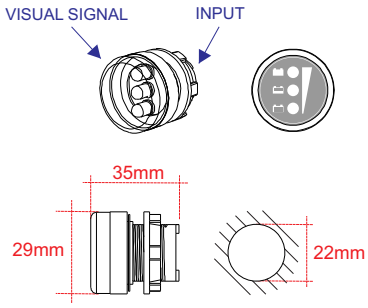

AL-KO Vehicle Technology Electronics S.r.l. Gaiarine Plant: Viale delle Industrie 6/a, 31018 Gaiarine (TV) - Italy Tel: +39 0434 759420 Fax: +39 0434 754620 www.nordelettronica.it info@nordelettronica.it

Member of DEXKO GLOBAL